DocuSign Envelope ID: 30BC06DA-8502-46FC-83DC-478BC8625065

NOTE: CONTRACTOR'S ATTENTION IS DRAWN TO THE FACT THAT PILE 18 SHALL BE INSTALLED PRIOR TO POURING CONCRETE FOR THE BOX CULVERT.

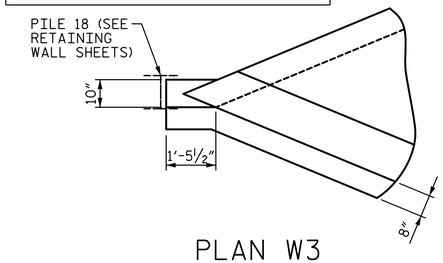

PLAN W3

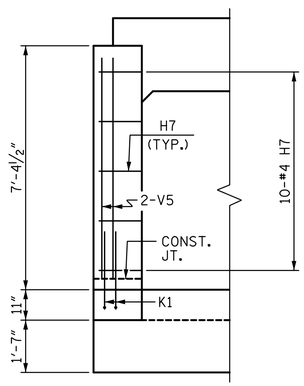

ELEVATION W3

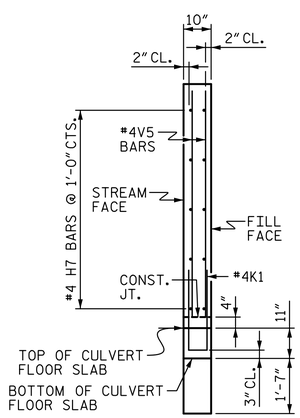

WING W3 SECTION

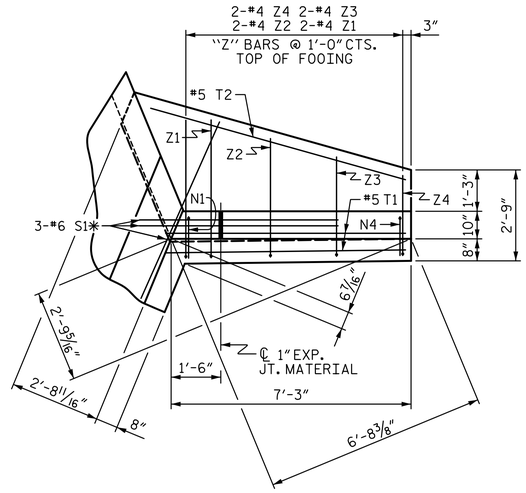

* S1 BARS @ BOTTOM OF FLOOR SLAB & FOOTING

PLAN W4

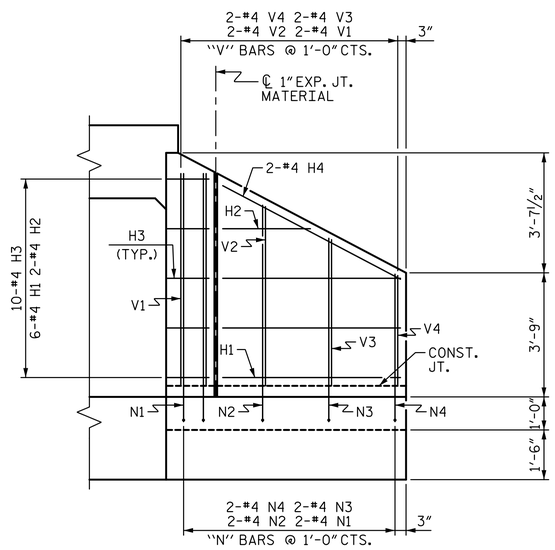

ELEVATION W4

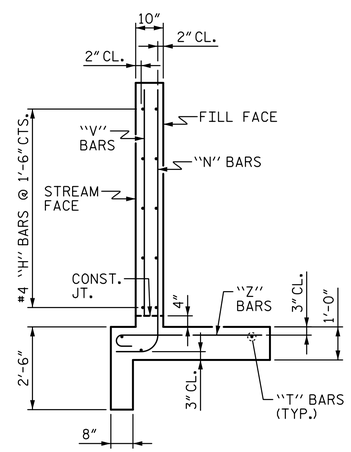

WING W4 SECTION

BAR TYPES

ALL BAR DIMENSIONS ARE OUT TO OUT.

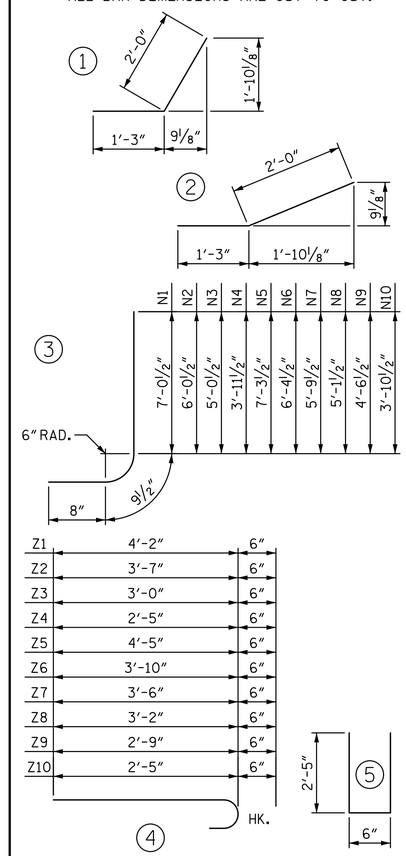

CLASS A CONCRETE

PHASE 1	
2 WINGS (INCLUDING FOOTINGS)	2.7 CY
1 HEADWALL	1.5 CY
1 TEMPORARY HEADWALL	2.6 CY
2 SILLS	1.1 CY
1 END CURTAIN WALL	2.4 CY
TOTAL PHASE 1	10.3 CY
PHASE 2	
2 WINGS (INCLUDING FOOTINGS)	7.9 CY
1 HEADWALL	1.5 CY
2 SILLS	1.1 CY
1 END CURTAIN WALL	3.4 CY
TOTAL PHASE 2	13.9 CY

BILL OF MATERIAL

BAR	PHASE 1 NO.	PHASE 2 NO.	SIZE	TYPE	LENGTH	PHASE 1 WEIGHT	PHASE 2 WEIGHT
H1	6	6	#4	STR	5'-4"	21	21
H2	2	2	#4	STR	2'-7"	3	3
H3	10	10	#4	1	3'-3"	22	22
H4	2	2	#4	STR	6'-0"	8	8
H5	0	6	#4	STR	16'-1"	0	64
H6	0	2	#4	STR	9'-2"	0	12
H7	10	10	#4	2	3'-3"	22	22
H8	0	2	#4	STR	16'-5"	0	22
K1	2	0	#4	5	5'-4"	7	0
N1	2	2	#4	3	8'-6"	11	11
N2	2	2	#4	3	7'-6"	10	10
N3	2	2	#4	3	6'-6"	9	9
N4	2	2	#4	3	5'-5"	7	7
N5	0	2	#4	3	8'-9"	0	12
N6	0	5	#4	3	7'-10"	0	26
N7	0	3	#4	3	7'-3"	0	15
N8	0	3	#4	3	6'-7"	0	13
N9	0	3	#4	3	6'-0"	0	12
N10	0	3	#4	3	5'-4"	0	11
S1	3	6	#6	STR	6'-0"	27	54
T1	2	2	#5	STR	7'-3"	15	15
T2	1	1	#5	STR	8'-0"	8	8
T3	0	3	#5	STR	18'-0"	0	56
V1	2	2	#4	STR	6'-5"	9	9
V2	2	2	#4	STR	5'-5"	7	7
V3	2	2	#4	STR	4'-5"	6	6
V4	2	2	#4	STR	3'-4"	4	4
V5	4	2	#4	STR	6'-8"	18	9
V6	0	5	#4	STR	5'-10"	0	19
V7	0	3	#4	STR	5'-2"	0	10
V8	0	3	#4	STR	4'-6"	0	9
V9	0	3	#4	STR	3'-11"	0	8
V10	0	3	#4	STR	3'-3"	0	7
Z1	2	2	#4	4	4'-8"	6	6
Z2	2	2	#4	4	4'-1"	5	5
Z3	2	2	#4	4	3'-6"	5	5
Z4	2	2	#4	4	2'-11"	4	4
Z5	0	2	#4	4	4'-11"	0	7
Z6	0	5	#4	4	4'-4"	0	14
Z7	0	3	#4	4	4'-0"	0	8
Z8	0	3	#4	4	3'-8"	0	7
Z9	0	3	#4	4	3'-3"	0	7
Z10	0	3	#4	4	2'-11"	0	6

REINFORCING STEEL		
	PHASE 1	234 LBS.
	PHASE 2	590 LBS.
	TOTAL	824 LBS.

PROJECT NO. B-6028

MACON COUNTY

STATION: 15+25.00 -L-

SHEET 9 OF 11

DocuSigned by: 88C7E5EFD4F8...

NORTH CAROLINA PROFESSIONAL SEAL 038640 ENGINEER WESLEY JONES
12/10/2021

STV 100 Years
STV ENGINEERS, INC.
900 West Trade St., Suite 715
Charlotte, NC 28202
NC License Number F-0991

DOCUMENT NOT CONSIDERED FINAL UNLESS ALL SIGNATURES COMPLETED

STATE OF NORTH CAROLINA
DEPARTMENT OF TRANSPORTATION
RALEIGH

WINGS FOR CONCRETE BOX CULVERT
H = 6'-0" SLOPE = 2:1
135°-00'-00" SKEW

REVISIONS								SHEET NO.
NO.	BY:	DATE:	NO.	BY:	DATE:			C-9
1			3					TOTAL SHEETS
2			4					14

DRAWN BY :	LEM	DATE :	8-17
CHECKED BY :	JAD	DATE :	9-17
DESIGN ENGINEER OF RECORD :	JWJ	DATE :	12-21

JJones 12/1/2021 6:27:22 PM R:\Structures\ustation\401_017_17BP.14.R.157_SMU_RCBC09.dgn