DocuSign Envelope ID: 30BC06DA-8502-46FC-83DC-478BC8625065

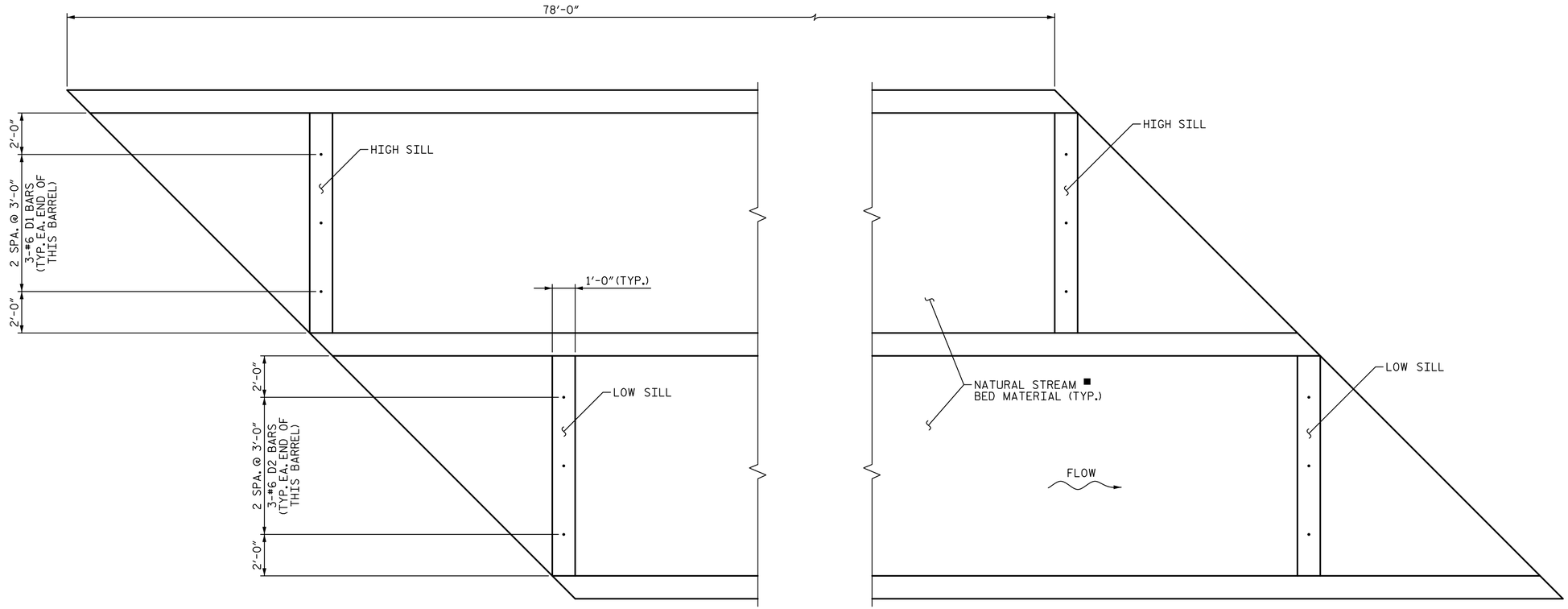

PLAN VIEW - LOCATION OF SILLS

■ NATURAL STREAM BED MATERIAL SHALL BE USED TO BACKFILL THE CULVERT BETWEEN SILLS. SEE SPECIAL PROVISION FOR "PLACEMENT OF NATURAL STREAM BED MATERIAL".

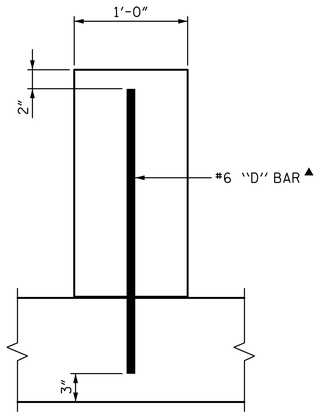

▲ DOWELS MAY BE PUSHED INTO GREEN CONCRETE AFTER SLAB HAS BEEN FLOAT FINISHED.

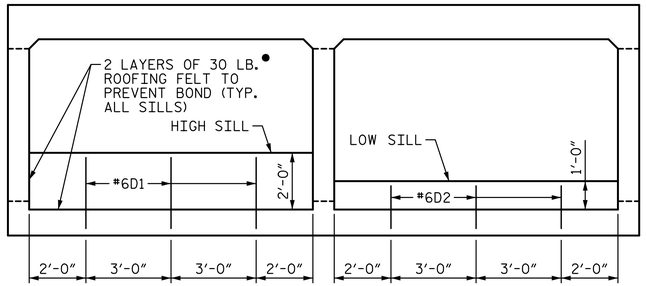

ELEVATION

(INLET VIEW SHOWN)

● THE COST OF THE ROOFING FELT IS INCIDENTAL AND SHALL BE INCLUDED IN THE VARIOUS PAY ITEMS.

DocuSigned by: D. Dickey Downey
68C7E5EFD4F8...

NORTH CAROLINA PROFESSIONAL SEAL 038640 ENGINEER WESLEY JONES
12/10/2021

STV 100 Years
STV ENGINEERS, INC.
900 West Trade St., Suite 715
Charlotte, NC 28202
NC License Number F-0991

DOCUMENT NOT CONSIDERED FINAL UNLESS ALL SIGNATURES COMPLETED

PROJECT NO. B-6028
MACON COUNTY
STATION: 15+25.00 -L-

SHEET 10 OF 11

STATE OF NORTH CAROLINA
DEPARTMENT OF TRANSPORTATION
RALEIGH

SILL DETAILS

REVISIONS						SHEET NO.
NO.	BY:	DATE:	NO.	BY:	DATE:	C-10
1			3			TOTAL SHEETS
2			4			14

DRAWN BY :	LEM	DATE :	8-17
CHECKED BY :	JAD	DATE :	9-17
DESIGN ENGINEER OF RECORD :	JWJ	DATE :	12-21

JJones 12/1/2021 6:27:48 PM R:\Structures\ustation\40I_019_17BP.I4.R.I57_SMU_RCBC10.dgn